A simple approach to calculation of the sliding wear coefficient for medium carbon steels

M. B. Karamiş and **D. Odabaş**
Engineering Faculty, Department of Mechanical Engineering, Erciyes University, Kayseri (Turkey)

(Received September 11, 1990; revised and accepted June 25, 1991)

Abstract

In the present study, the sliding wear coefficients of hypotectoid steels used in manufacturing many machine elements have been investigated theoretically and experimentally. Under dry sliding conditions a relationship between the wear coefficient and carbon content in the steel has been established.

It has been shown that the sliding wear coefficient and mass loss were reduced by increasing carbon content. The theoretical results are in good agreement with the experimental results.

1. Introduction

A great deal of research has been carried out to reduce and control the wear of relatively moving surfaces in many areas of engineering. A reduction in the friction and wear of rubbing surfaces ensures dimensional stability by keeping the material and energy losses at a desired minimum level. Thus an analysis of the wear mechanisms is very important in selecting a remedy to combat wear. For this reason, the properties of the wear surfaces and the environmental conditions of the tribosystems must be known. The optimization of the tribosystem for wear control arises from the careful examination of the data obtained from wear tests on materials for which the properties are known.

The quantitative evaluation of surface wear caused by mechanical frictional contact is a difficult problem to explain as the wear observed in practice depends on many factors and circumstances. So the phenomenon of wear has to be considered as a system property [1]. The main factors and circumstances that determine a tribosystem are the type of motion, the material combination, the sliding velocity, the surface topology, the magnitude and nature of loading, the average contact pressure, the operating temperature, the lubricant and the mode of lubrication, the ambient medium and the duration of the wear process. All factors and circumstances may vary considerably from case to case; so there are many different tribosystems.

Verbeek [2] has analysed some tribological cases observed in practice and classified them into main groups according to the rough characteristics for the combination index and the lubrication condition (Fig. 1). The codes for the combination index are as follows: M, metals; P, plastics; T, tools; W, workpiece. The codes for the lubrication condition are as follows: D, dry friction; B, boundary lubrication; F, fluid film lubrication. For example the main group M/M-D means a metal–metal combination subjected to dry sliding.

0043-1648/91/$3.50 © 1991 — Elsevier Sequoia, Lausanne

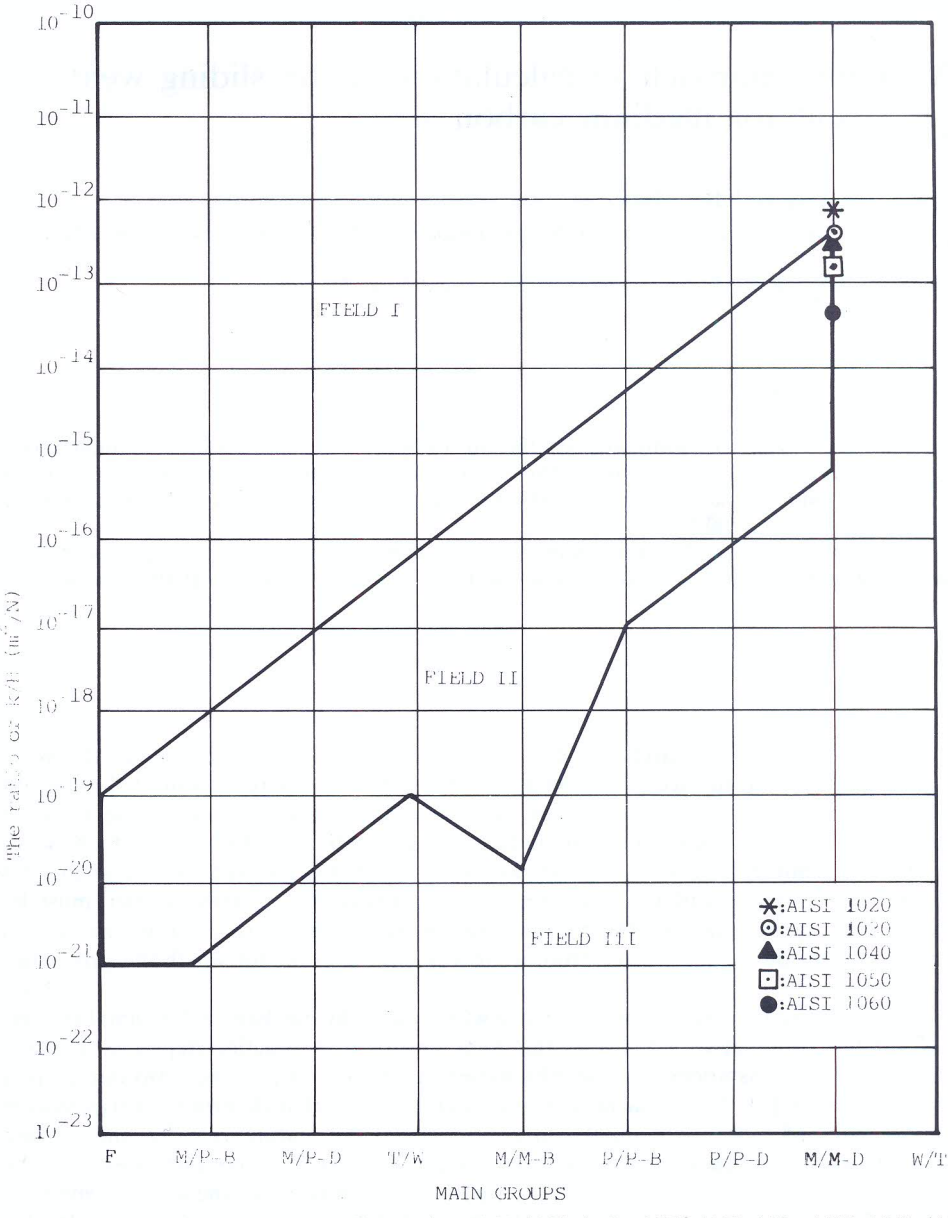

Fig. 1. The variation in wear coefficient for AISI 1020 (×), AISI 1030 (⊙), AISI 1040 (▲), AISI 1050 (□) and AISI 1060 (●) according to the friction pairs: *H*, material hardness; M, metal; P, plastic; T, tool; W, workpiece; D, dry friction; B, boundary lubrication; F, fluid film lubrication. (These are valid for all frictional pairs.)

The evaluation diagram in Fig. 1 enables a rough evaluation to be made of tribological cases on the basis of the field in which they are located. Three identifiable fields I, II and III can be separated. In field I, wear is relatively high. Tribological

cases located in this field can generally be improved by a more suitable choice of parameters or circumstances. Field II contains the tribological cases observed in practice. Of these, the more favourable cases are located in the lower part of this field. In field III, no practical tribological cases have yet been observed. The main group W/T (workpieces to be machined by tools) on the extreme right has been added to the diagram for the purpose of comparison.

The ratio k/H of the wear coefficient to the hardness of the softer contact surface is read on the vertical scale in Fig. 1. The wear coefficient of materials has been widely used to characterize their properties because the phenomenological relationship between these parameters is reasonably consistent with experimentally observed results. A number of attempts have been made to justify the relationship theoretically. The most widely quoted analysis is that of Archard [3] who derived the wear coefficient k based on the adhesion model of wear. The wear coefficient k is a number which essentially indicates the probability of the formation of a wear particle at each asperity interaction [3, 4].

By examining the data obtained, the wear coefficient k is calculated by considering relevant mathematical relations. The purpose of this study is to estimate the sliding wear coefficient of medium carbon steels both experimentally and theoretically. In the present theoretical study the wear coefficients of hypotectoid steels were determined as a function of its carbon content and compared with the experimental results.

From the present study, it appears that it is possible to choose a steel having an appropriate carbon content which meets the desired wear requirements. In addition to this, the carbon content would be at such an appropriate level that the optimization of the mechanical system manufactured from hypotectoid steels for minimum amount of wear could be possible.

2. Determination of sliding wear coefficient as a function of carbon content

The hardness obtained by cooling the steel more rapidly than its critical cooling rate (preventing transformation to bainite or pearlite) is a function of the carbon content of the steel [5]. It has been shown that the hardness of steels is proportional to the square root of carbon content as follows [6]:

$$H = a + bC^{1/2} \tag{1}$$

where H (kgf mm^{-2}) is the hardness of steel, C (wt.%) is the carbon content, and a and b are constants. Equation (1) is an empirical relation between the carbon content and the hardness of the steel and it is valid for medium carbon steels. The constants a and b in eqn. (1) are calculated by the least-squares method.

In actual practice, the microstructure of the surface layers close to the wear surface changes during the initial running-in period and the microstructure of the surface deviates drastically from that of the bulk material [7–9]. Owing to the presence of irregularities on real surfaces, contact between solids occurs only at certain asperities and severe stress is created at these points. Therefore the asperities are plastically deformed and a fine-grained microstructure is produced. Also metallographic results from numerous investigators have demonstrated clearly that plastic deformation is common near the surface of sliding materials. The hardness of this layer is not constant during the sliding. Also, the hardness of the microstructure is not controlled during the test. For this reason, the main aim of the present study was to determine a simple equation which depends on carbon content of steel considering the initial surface conditions.

It is well established that the amount of sliding wear is a function of hardness of wear surface through [3]

$$V = \frac{kFL}{3H} = \frac{G}{\gamma} \tag{2}$$

where k is referred to as the wear coefficient to be determined, V (m^3) is the wear volume, G (kg) is the mass loss, F (N) is the applied normal load, L (m) is the sliding distance and γ (kg m^{-3}) is the density of the material (for steels, 7800 kg m^{-3}).

From eqn. (2), the wear coefficient of materials can be written as

$$k = \frac{3VH}{FL} = \frac{3GH}{\gamma FL} \tag{3}$$

On substitution of eqn. (1) into eqn. (3), the sliding wear coefficient of medium carbon steels can be related to the carbon content:

$$k = \frac{3G(a + bC^{1/2})}{\gamma FL} \tag{4}$$

On the contrary from the experimental results, we concluded that there exists a simple empirical relationship between the mass loss G and the carbon content C of medium carbon steels [10]. This relationship is given by

$$G = \frac{K'}{C} - K'' \tag{5}$$

where K' and K'' are constants calculated by regression analysis using the experimental values G and C. Equation (5) can only be tested under various experimental conditions of medium carbon steels. For each wear condition, the constants K' and K'' vary.

On substitution of eqn. (5) into eqn. (4), an expression for the wear coefficient in terms of carbon content is found as

$$k = \frac{3\{(K'/C - K'')(a + bC^{1/2})\}}{\gamma FL} \tag{6}$$

Thus the sliding wear coefficient of medium carbon steels can be described as a function of the load F, the sliding distance L, the density γ and the carbon content by means of eqn. (6). From this equation the theoretical values of the wear coefficient of the medium carbon steels can be calculated.

3. Material and experimental method

3.1. Material

Steels with various carbon contents were used in the present experiments including AISI 1020, 1030, 1040, 1050 and 1060. These five steels were chosen to investigate the effect of carbon content on the sliding wear coefficient. The chemical compositions of these steels are given in Table 1.

All the samples were machined from the same batch of hot-rolled materials. The upper samples were pins 30 mm long by 20 mm in diameter. The lower samples were made into a rectangular block of dimensions 30 mm × 250 mm × 8 mm. The sample configuration used is illustrated in Fig. 2.

TABLE 1

Chemical compositions of test steels

Company	Material	Chemical composition (wt.%)									
		C	Mn	Si	P	S	Cr	Ni	Mo	Al	Cu
MKE	AISI 1020	0.20	0.46	0.26	0.015	0.033	–	–	–	–	–
MKE	AISI 1030	0.30	0.63	0.18	0.033	0.045	–	–	–	–	–
MKE	AISI 1050	0.45	0.78	0.26	0.023	0.033	–	–	–	–	–
MKE	AISI 1060	0.59	0.66	0.24	0.030	0.034	–	–	–	–	–
Asil Celik	AISI 1040	0.339	0.682	0.207	0.021	0.033	0.184	0.117	0.024	0.280	0.008
	AISI 1060	0.564	0.724	0.295	0.020	0.027	0.159	0.119	0.022	0.025	0.017

TABLE 2

Heat treatments of the samples

Material	Homogenization		Austenitization			Tempering		Final Vickers hardness (load 60 kgf) ($kgf\ mm^{-2}$)
	Temperature (°C)	Time (h)	Temperature (°C)	Time (h)	Quench	Temperature (°C)	Time (h)	
AISI 1020	900	1	880	0.5	Water	300	1.5	260
AISI 1030	890	1	860	0.5	Water	300	1.5	460
AISI 1040	880	1	840	0.5	Water	300	1.5	495
AISI 1050	840	1	820	0.5	Water	300	1.5	570
AISI 1060	820	1	800	0.5	Water	300	1.5	620

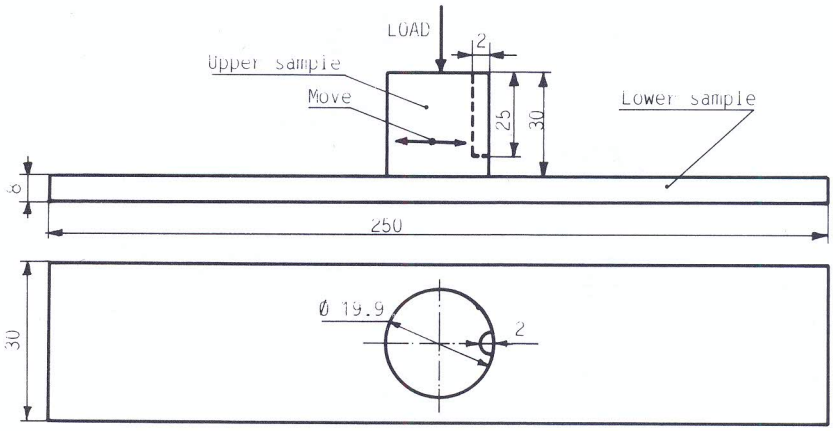

Fig. 2. Test rig (schematic) and the dimensions of samples.

After machining, the heat treatments were applied to the samples. Then the samples were ground; this was followed by the hardness measurements. The heat treatment conditions and hardness values are given in Table 2. After grinding, the surface roughness values for the upper and lower samples were equal and approximately $R_a = 1$ μm. Prior to testing, all the samples were cleaned by rinsing in ethanol and drying in hot air.

3.2. The test method

The reciprocating wear test were carried out using a machine working on a sliding principle. This machine has four triboelements, *i.e.* the friction pairs, interface matter (worn particle) and the atmosphere (air) [10].

The lower samples, made from steel 1060 with a Vickers hardness of 750 kgf mm^{-2}, were fixed on the bottom table of the machine and kept stationary during the tests. The upper sample to be tested was mounted in a pin holder (Fig. 3). The pin holder was fixed on the end of the lever which was moved in a reciprocating motion in a guide by crank shaft. The crank shaft was driven by an electric motor. The stroke of a reciprocating motion was equal to 60 mm (*i.e.* twice the length of the lower sample equals 60 mm). The sliding distance L is calculated from the number of the strokes multiplied by 60 or the duration of the wear multiplied by the sliding velocity. The number of the strokes during wear tests was measured by means of a digital counter.

The pin samples were loaded by a hydraulic hand pump which pumps the oil into the pressure chamber (Fig. 3). The pressure oil in the pressure chamber forces the rubber diaphragm which contacts with the top of the pin sample. Thus pressure is applied to the pin. The pressure on the pin was measured by means of a oil manometer as 0.25 MPa. The normal load was calculated as 75 N, *i.e.* the pressure multiplied by the cross-section of the pin.

The tests were conducted dry, at room temperature, under room humidity, for a constant sliding distance (2000 m) at an average sliding speed of 0.3 m s^{-1} and under a constant pressure (0.25 MPa). Prior to determining the mass of the pin samples, they were cleaned by rinsing in ethanol and drying in hot air. The wear amount was determined as mass loss using an analytic balance which has an accuracy of 0.1 mg. The wear test results are given in Table 3.

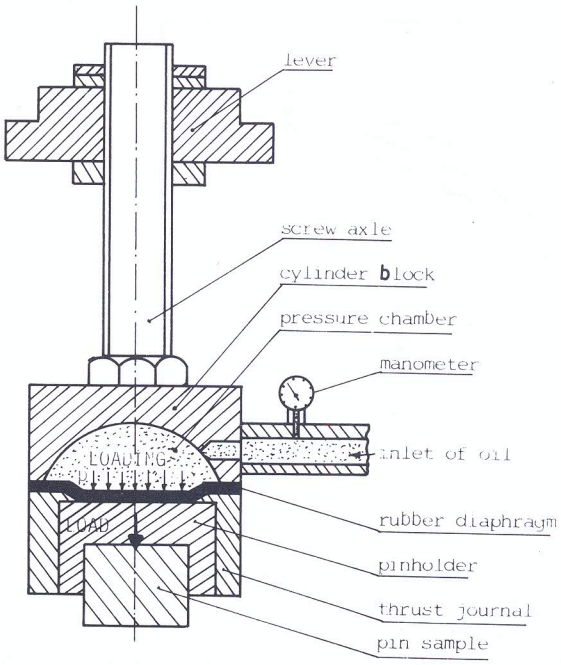

Fig. 3. The hydrostatic loading and pin holder assembly.

TABLE 3

Theoretical and experimental results

Material	Mean mass loss, experimental G (kg)	Wear coefficient k		k/H ratio ($m^2\ N^{-1}$)
		Theoretical	Experimental	
AISI 1020	271×10^{-6}	236×10^{-5}	233×10^{-5}	8.9×10^{-13}
AISI 1030	183×10^{-6}	173×10^{-5}	212×10^{-5}	4.6×10^{-13}
AISI 1040	145×10^{-6}	162×10^{-5}	182×10^{-5}	3.6×10^{-13}
AISI 1050	59×10^{-6}	101×10^{-5}	89×10^{-5}	1.5×10^{-13}
AISI 1060	26×10^{-6}	61×10^{-5}	48×10^{-5}	7.4×10^{-14}

4. Results

4.1. The effect of carbon content on the wear rate

The capability of hardening medium carbon steels is a function of carbon content. Increasing hardness by heat treatment increases the wear resistance during the steel–steel friction. Therefore the wear rate can be decreased with increasing carbon content. In fact, the carbon content determines the hardness and wear resistance.

The relationship between carbon content and hardness, given as $H(a+bC^{1/2})$ in Section 2, gives a parabolic curve (Fig. 4). In this equation, the constants a and b were calculated with a correlation of 95% to be -167 kgf mm^{-2} and 1076 kgf kgf^{-1} mm^{-2} respectively [10].

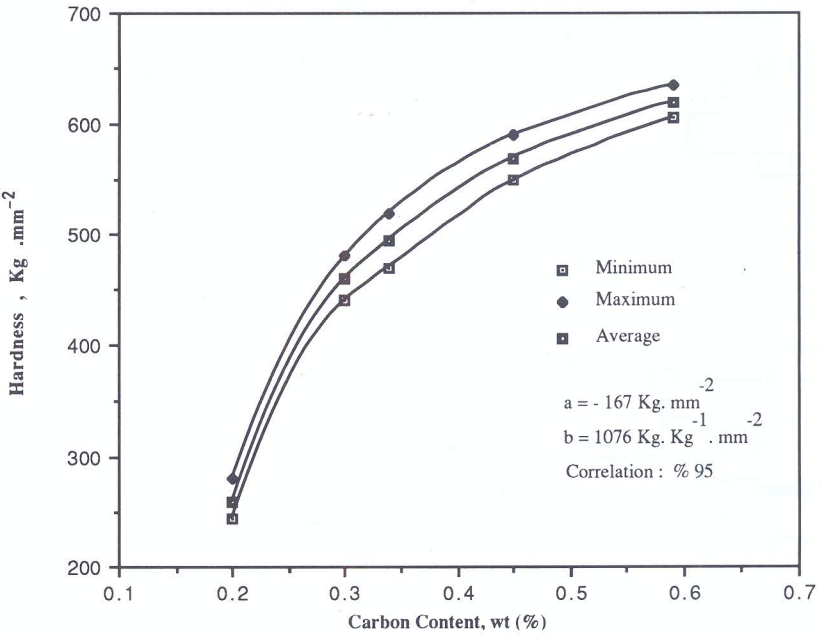

Fig. 4. After tempering variation in the Vickers hardness of hypotectoid steels with carbon content C.

The present tests showed that the mass loss is decreased very rapidly by the increasing carbon content, *e.g.* the mass loss is decreased by a factor of 10 if the carbon content is increased threefold (Fig. 5). Thus the carbon content in medium carbon steels is an important factor in determining the wear rate.

When eqn. (5) was solved, $G=(75/C-100)\times 10^{-6}$, was obtained with a correlation of 96% (Fig. 5). K' and K'' were found to be 75×10^{-6} kg^2 kg^{-1} and 100×10^{-6} kg respectively using the experimental values G in Table 3 and the carbon content C.

X-ray diffraction studies of the wear particles obtained during tests were made. This analysis showed that the wear particles consisted of Fe, α-Fe_2O_3 and Fe_3O_4. Oxide films developed on the steel surfaces during sliding have a marked influence on the friction and wear behaviour. When Fe_3O_4 predominates, it produces a more protective surface film than α-Fe_2O_3 does, resulting in lower wear rates.

Figure 6 shows the microstructure in normal sections through wear surfaces. It can be seen that the subsurface is affected by frictional forces and heat generated during the friction. There are two sections in the microstructure. The topmost part has been found to exhibit an extremely fine microstructure as a result of the large amount of damage encountered there. This section is called the "mechanically affected layer". Beneath this lies a region of essentially undeformed bulk material. It can be seen from Fig. 6 that AISI 1020 steel deformed more plastically than did AISI 1060 steel (just the subsurface). The study shows that the plastic deformation of the subsurfaces increases with decreasing carbon content.

Figure 7 shows the optical micrographs of the worn surfaces of pin samples after dry sliding wear. The grooves in the worn surface of AISI 1020 steel are larger than those in the other steels (Fig. 7(a)). The worn surface of AISI 1060 steel has the

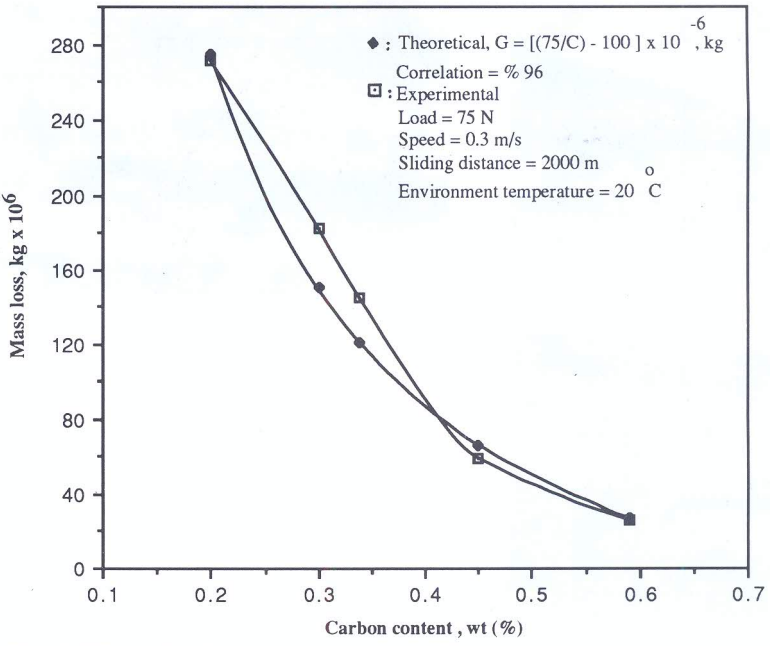

Fig. 5. Effect of carbon content on wear. (Each point represents an average of three values.)

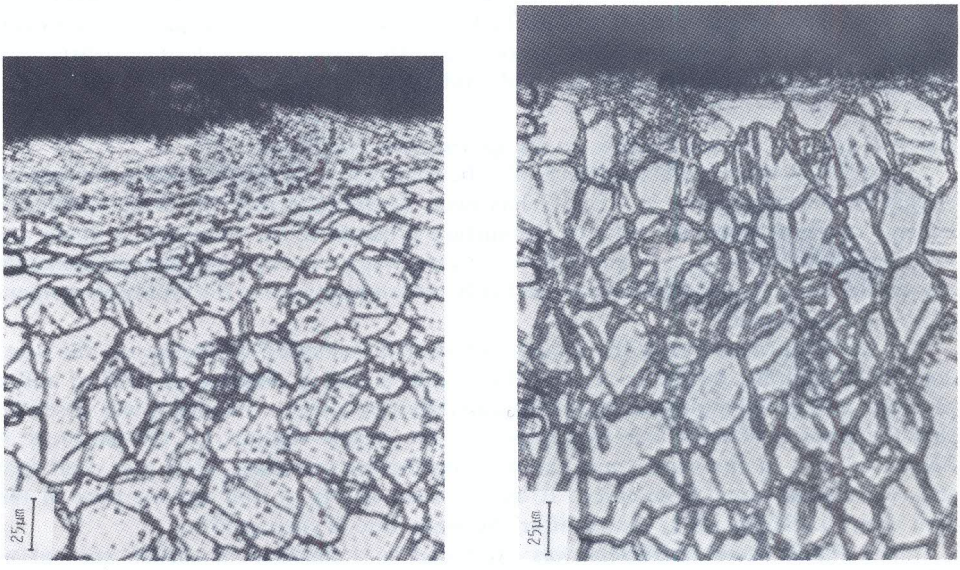

(a) (b)

Fig. 6. Optical microstructures of pin samples after the wear tests (contact pressure, 0.25 MPa; sliding speed, 0.3 m s^{-1}; sliding distance, 2000 m): (a) AISI 1020 steel; (b) AISI 1060 steel. (Original magnifications, ×272.)

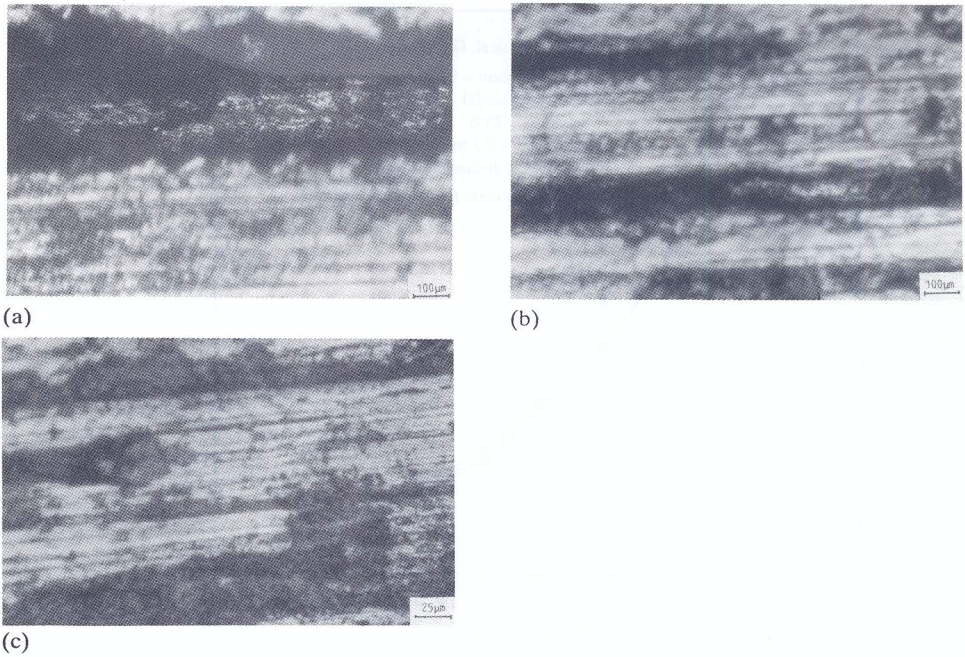

(a) (b) (c)

Fig. 7. Optical micrographs of the worn surfaces of pin samples: (a) AISI 1020 steel; (b) AISI 1040 steel; (c) AISI 1060 steel. (Original magnifications, (a), (b) ×46; (c) ×184.)

narrowest grooves (Fig. 7(c)). This is evidence that the carbon content affects the wear behaviour of the steel. The attached debris on the worn surfaces of steels can be distinguished as oxidative debris according to the ferruginous colour of debris. The worn surfaces are characteristic of mild oxidational wear.

4.2. The effect of carbon content on the sliding wear coefficient

The sliding wear coefficient has a value between zero and one. In studies concerning sliding wear mechanisms in steel, it has been determined that the wear coefficient became constant when the ratio of the surface pressure to the material hardness was a third and that it increased rapidly after this ratio was exceeded [11]. This phenomenon was explained by the increasing wear due to plastic deformation and the rapid enlargement of the contact zone.

It was determined that the amount of wear is increased by increasing the wear coefficient (Fig. 8). In the tests carried out with a sliding distance of 2000 m and a pressure of 0.25 MPa on samples containing different carbon contents, it was observed that the amount of wear increases rapidly as the carbon content, *i.e.* the hardness, is decreased and, at the same time, the wear coefficient increases. Thus it is clear that the real contact area is enlarged. It can be seen in Fig. 8 that the increase in the rate wear coefficient slows down after the wear rate is increased.

The sliding wear coefficient was expressed as a function of carbon content as follows:

$$k = 0.274 \times 10^{-7}(-167 + 1076C^{1/2})\left(\frac{75}{C} - 100\right) \tag{7}$$

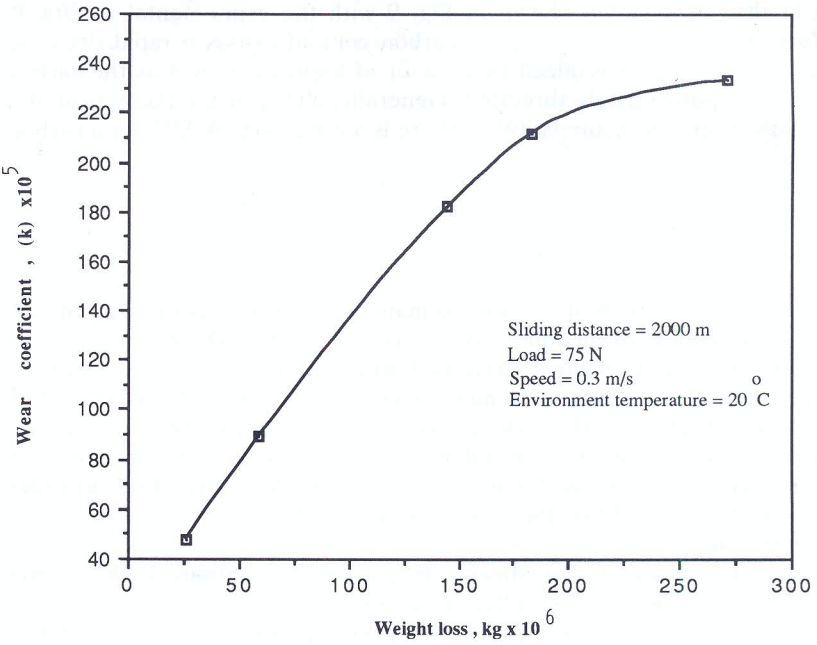

Fig. 8. Variation in wear coefficient with wear amount. (Each point represents an average of three values.)

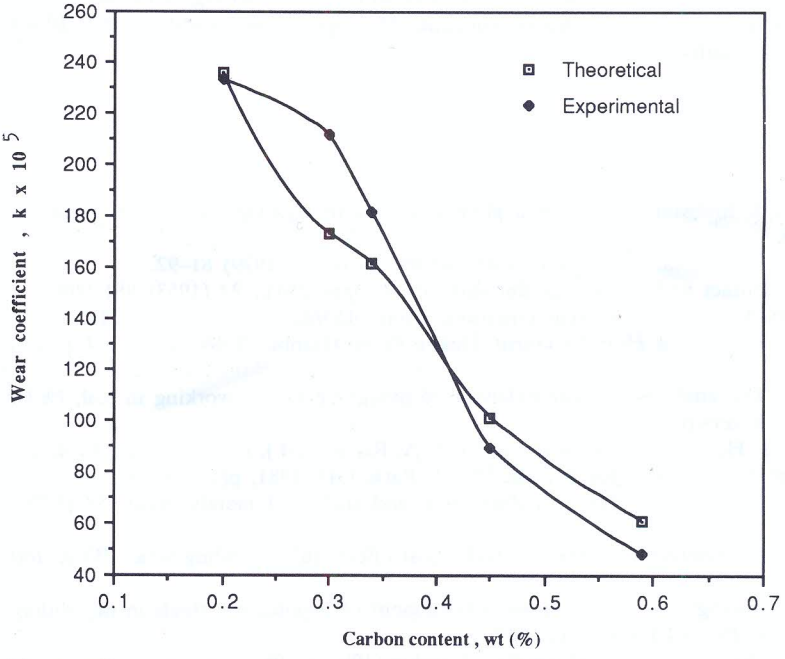

Fig. 9. Effect of carbon content on the wear coefficient.

The variation in the coefficient is shown in Fig. 9 with the experimental results. It can be seen from Fig. 9 that increasing the carbon content causes a rapid decrease in the wear coefficient which is reduced by a factor of approximately 4 as the carbon content in increased approximately threefold. Generally, although the theoretical and experimental results show good compatibility, there is a difference of 22% for a carbon content of 0.3 wt.%.

5. Conclusions

From the results of this work the following main conclusions may be summarized.

(1) The wear behaviours of medium carbon steels depend on the carbon content. The material loss and wear coefficient decreased with increasing carbon content.

(2) In dry sliding conditions with a metal–metal combination, the ratio of k/H must be decreased by increasing the hardness of steel to decrease the material loss. In Fig. 1, for the condition M/M-D (metal–metal combination in dry friction) the value of k/H changes over the range 5×10^{-13}–7×10^{-14} m^2 N^{-1}. Therefore, in order to work with applications in field II, the ratio of k/H must be decreased by increasing the hardness of the steels.

(3) The subsurface of the steel is affected by plastic deformations. If the carbon content of steel is relatively high, this effect is lower.

(4) The subsurfaces of the steels containing a low carbon amount is scratched more easily than those of the steels containing a high carbon amount. This causes damage of the surface.

A number of wear tests must be carried out in order to develop a material which is suitable for the operating conditions with the optimum carbon content and to select the steel which will be used in manufacturing the machine parts working in a tribosystem. However, the best rig must be set up to simulate the operating conditions to obtain good experimental results.

References

1 H. Czichos and J. Mølgaard, Towards a general theory of tribological systems, *Wear, 44* (1977) 247–264.
2 H. J. Verbeek, Tribological system and wear factors, *Wear, 56* (1979) 81–92.
3 J. F. Archard, Contact and rubbing of flat surfaces, *J. Appl. Phys., 24* (1953) 981–998.
4 J. Halling, Toward a mechanical wear equation, *Trans. ASME, 105* (1983) 212–219.
5 K. E. Thelning, *Steel and its Heat Treatment,* Haken Press, Istanbul, 1984, Chapter 4, p. 128 (in Turkish).
6 M. B. Karamiş, The analyses of wear behavior of ploughing blades working in soil, *Ph.D. Thesis,* Erciyes University, 1985.
7 O. Vingsbo and S. Hogmark, Wear of steels. In D. A. Rigney (ed.), *Fundamentals of Friction of Materials,* American Society for Metals, Metals Park, OH, 1981, pp. 373–408.
8 D. A. Rigney and J. P. Hirt, Plastic deformation and sliding of metals, *Wear, 53* (1979) 345–370.
9 F. E. Kennedy, Jr., Thermal and thermomechanical effects in dry sliding wear, *Wear, 100* (1984) 453–478.
10 D. Odabaş, An investigation on sliding wear coefficient of hypotectoid steels in dry sliding wear, *MSc. Thesis,* Erciyes University, 1987.
11 J. Halling, *Principles of Tribology,* Macmillan, London, 1983, p. 98.